INSTALLATION INSTRUCTIONS

Taymor

17-F8536AL
8500 SERIES
FIRE RATED PUSH PAD RIM EXIT DEVICE

LHR DOOR SHOWN (RHR DOOR OPPOSITE)

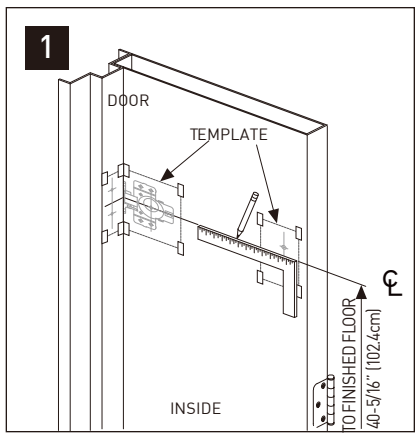

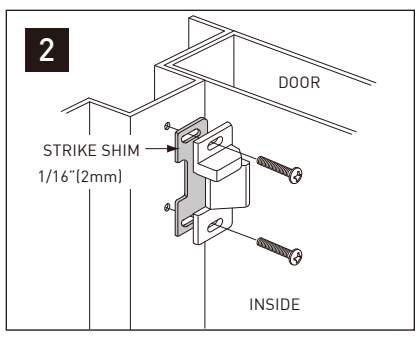

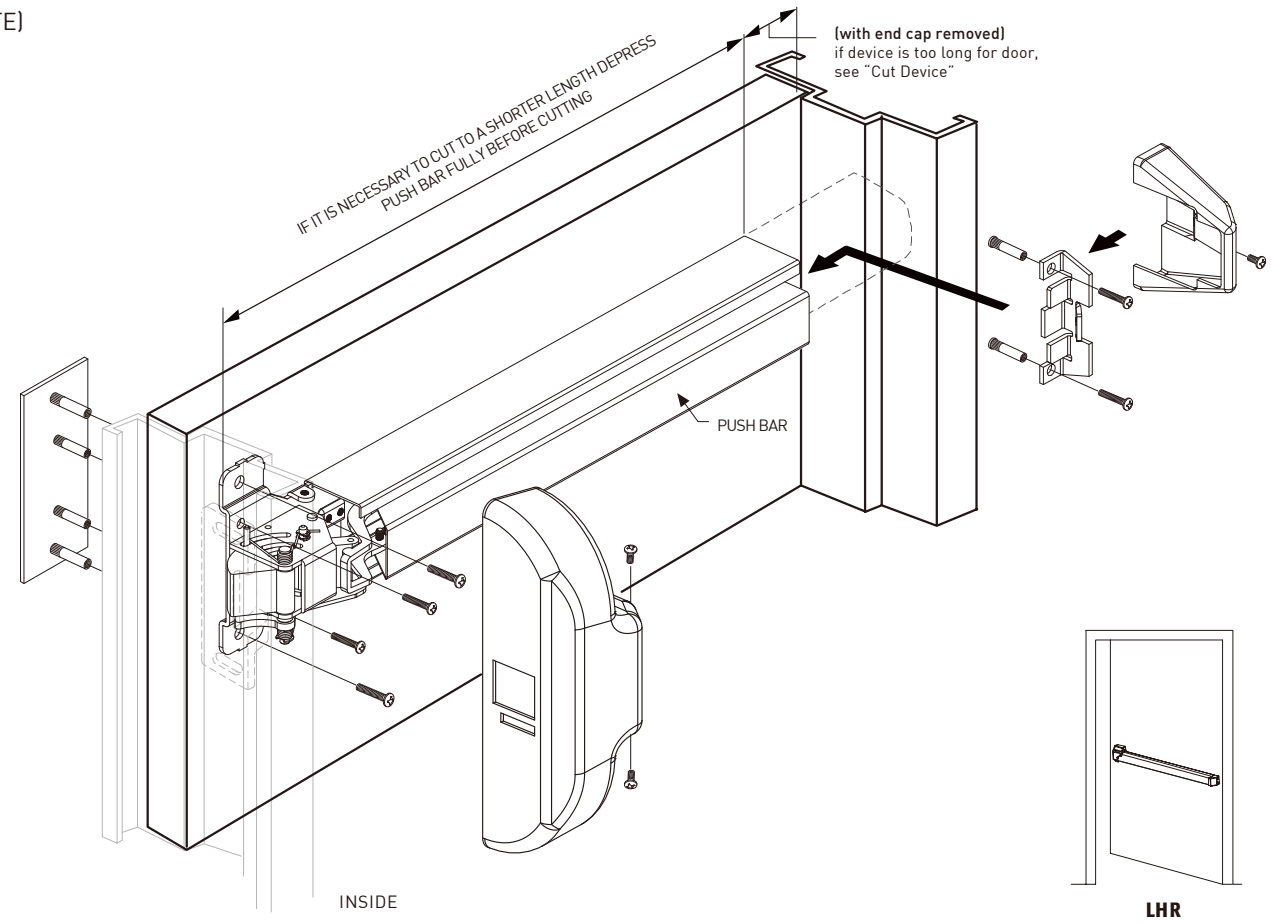

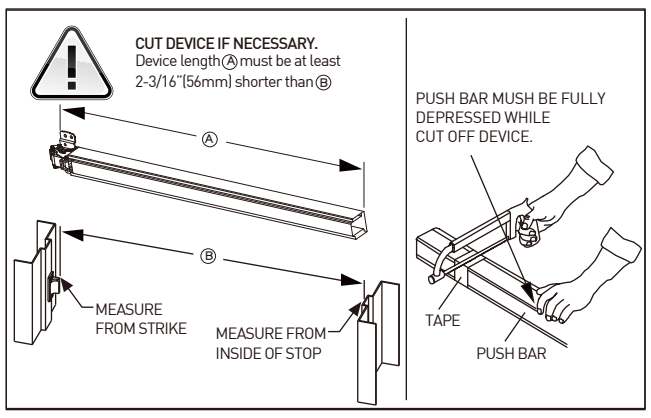

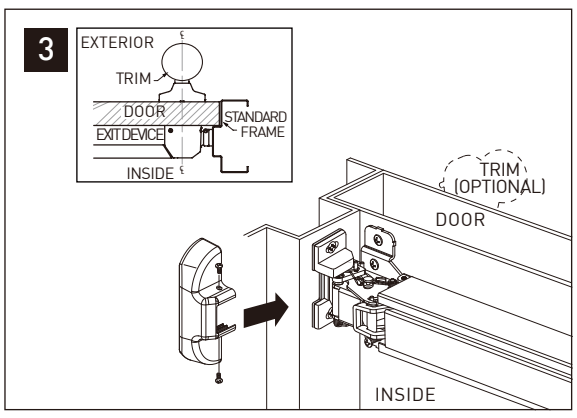

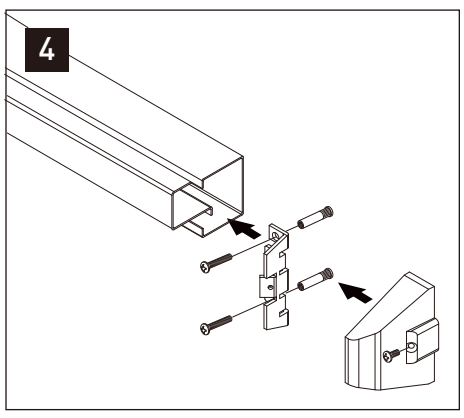

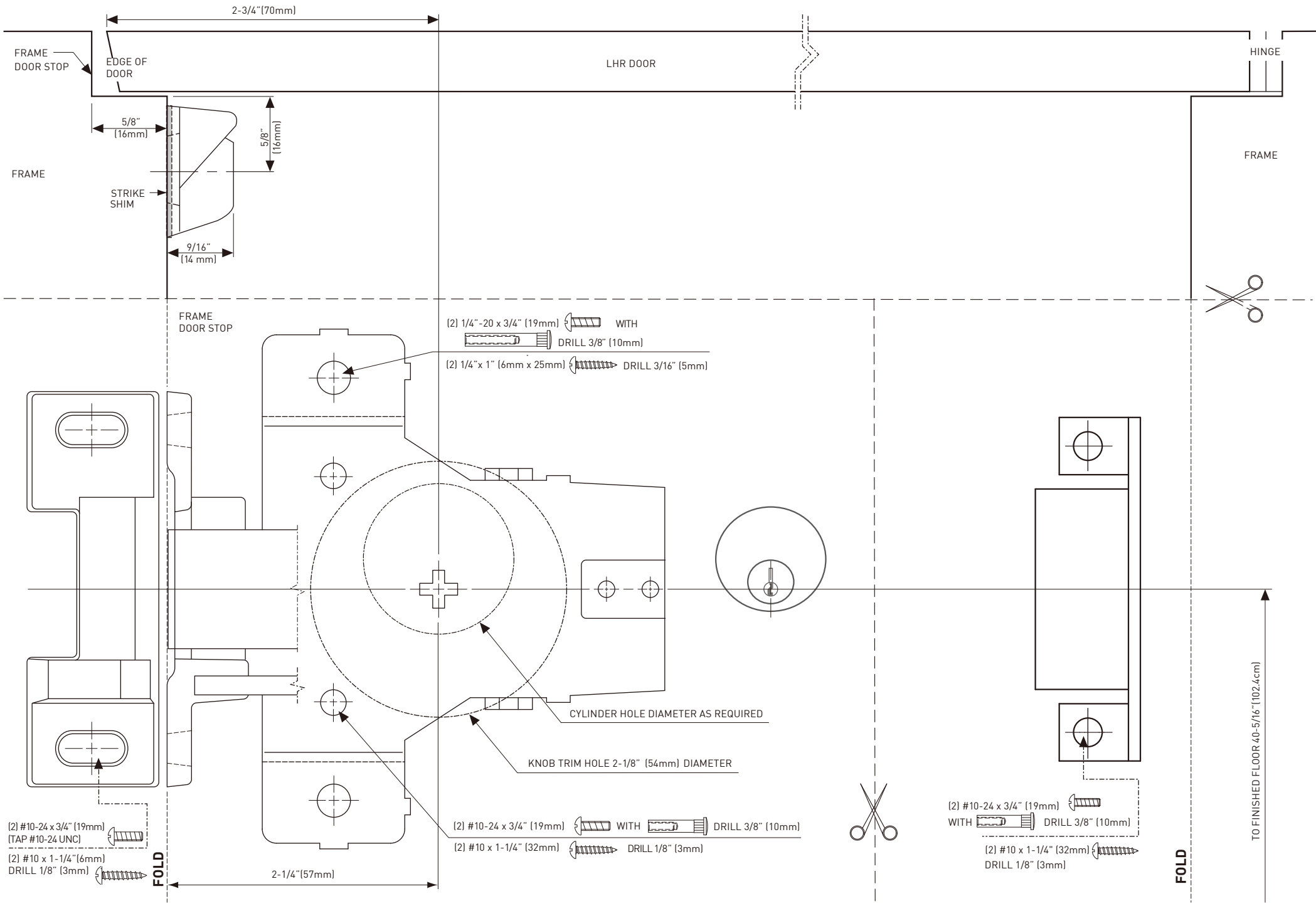

MAY 2026

E26-8D40RF113
10/10-00

taymor.com

® REGISTERED TRADEMARK OF TAYMOR INDUSTRIES LTD